Special edition paper

New Visual Inspection System of Rolling Stock Underside by Image Processing Technique




Akihide Uno* Takehito Fujii* Hiroyuki Nakajima* Masanori Endo**

* Technical Center Development, Research and Development Center of JR EAST Group
** ICT Business Dept., JR East Consultants Company (formerly at Technical Center, Research and Development Center of JR EAST Group

Abstract

With image processing technology, we have developed a failure detection system for inspection of rolling stock. In this system, failures such as looseness of bolts fixing underfloor equipment to the car body, and rotation of cover handles of equipment are automatically detected; and if necessary, inspectors can check the rolling stock with images displayed by the system.

We have completed development of a system for inspecting the side of the underfloor equipment, and have been working to apply the system for the middle area of the underfloor equipment and for the roof. In this paper, we give an overview the system and user interface of the system for inspecting the side of the underfloor equipment.

●***Keywords*:** Rolling stock, Underfloor equipment inspection, Image processing, Line camera

1. Introduction

Conventionally, underside inspection of rolling stock (confirmation of attachment to body, presence of deformation, etc.) is done by human eyes. There are more than 100 locations to be inspected per car, and those are very diverse, covering areas such as bogies, equipment boxes, bolts, and inspection cover handles. Many inspection experts are needed to perform those inspections, and a broad range of knowledge and experiences is demanded of them. Moreover, work is done on equipment under floors, so inspection pits are required to perform that work.

This paper reports on development and verification of a system to automatically judge presence of abnormalities on the sides of rolling stock underfloor equipment using image processing technology in order to automate some visual inspections.

Fig. 1 Inspection Work for Underfloor Equipment

2. Overview of Development

2.1 Mechanism of Abnormality Detection

This system replaces conventional inspection by recording the sides of underfloor equipment of running rolling stock using cameras installed at the wayside, compositing and correcting images obtained, and automatically comparing the recorded images with prerecorded images of normal conditions by software. If the difference exceeds a certain level, it is judged to be an abnormality. Judgment is made each time a car passes the system, and judgment results are automatically displayed on a terminal.

The detailed inspection process is conducted by the following procedure.

(a) Record images of underside of rolling stock running at 25 km/h or less by line scan camera*.

(b) Correct brightness that differs according to time of recording for strip-shaped images recorded by the line scan camera. Merge images to create an image for one car, and then compensate for stretch from speed (sudden acceleration or braking) when the car is running and effects of vibration and the like (Fig. 2).

(c) Perform the following processing by software for the image of (b), above.
Extract edges of equipment from the difference in brightness of adjacent pixels and compare with edge brightness of "normal" rolling stock registered in advance.

(d) If the difference in brightness is greater than a certain level, judge the inspected car as "having abnormalities", being changed from normal condition.

(e) The process above is performed automatically each time a car passes the system, and whether normal or abnormal is displayed on a terminal. An alarm is displayed on the terminal when abnormality is detected, and inspection experts check the image and make inspection as needed.

* Camera that continuously records images in a line shape, used in factory product inspections and the like

2.2 System Composition

This system is composed of a recording device (camera and light projector), image processor, terminal, vehicle approach detector, and vehicle ID detector (Fig. 3).

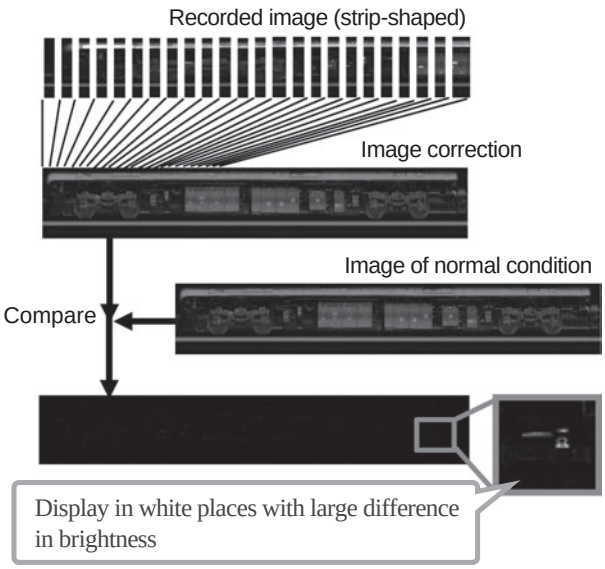

Fig. 2 Flow of Image Processing

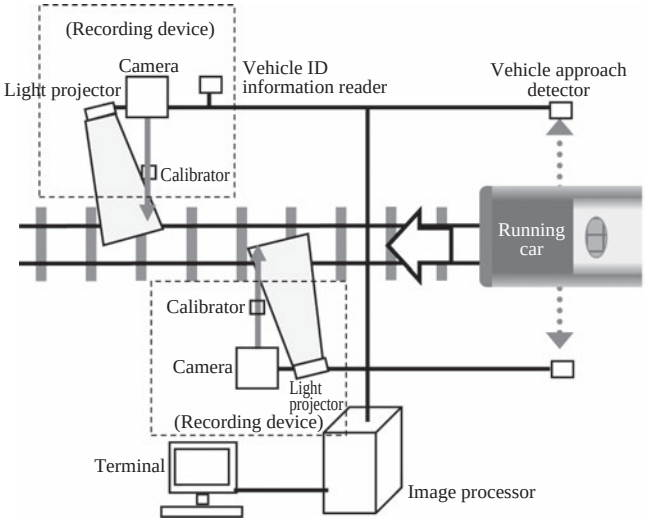

Fig. 3 System Configuration

2.3 Main Points of Development

In development of the system, (1) recording device, (2) abnormality judgment algorithm, and (3) error detection ability are particularly important points. The following introduces details of our efforts.

(1) Recording device design

Fig. 4 shows the positional relationship of the camera and light projector and the vehicle. Lighting needs to shine evenly on the multiple objects to be inspected in order to perform judgment processing by accurate and stable images. In this development, we decided on the camera and light projector position and angle by brightness simulation and installed those so brightness is of the appropriate value on the line that the camera records in each section in a direction parallel to the sleepers (Fig. 5).

(2) Abnormality judgment algorithm development

In designing the algorithm, (a) correction of brightness in relation to outside light and (b) elimination of the effect of rolling stock speed change and body and bogie vibration due to running are major points. The following introduces details of our efforts.

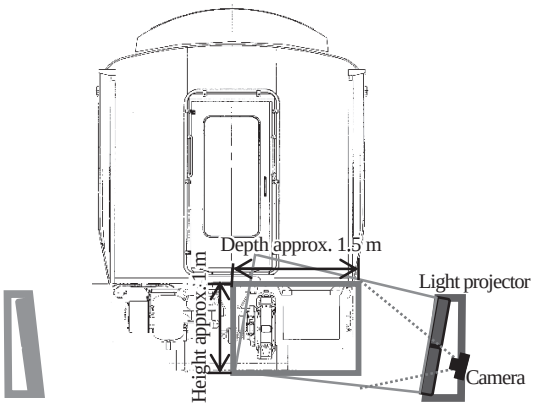

Fig. 4 Overview of Recording Device

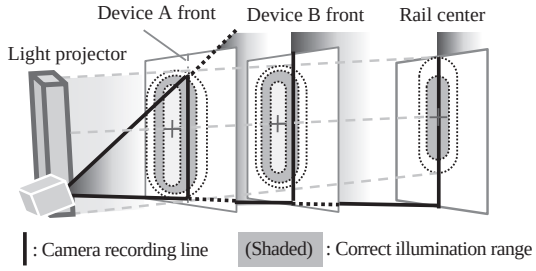

Fig. 5 Investigation of Camera and Light Projector Position

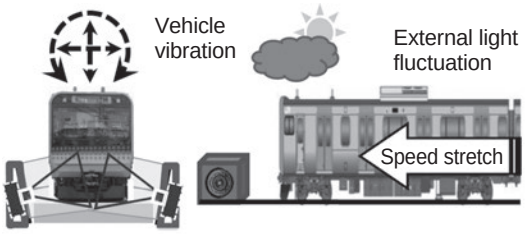

Fig. 6 Factors that Affect Image

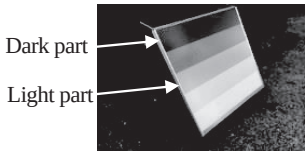

Fig. 7 Calibrator

(a) Brightness correction

The surrounding environment differs every time a car passes the system. The system judges abnormalities by comparing brightness, so there is a possibility that changes in brightness of the recoded image due to time of day (day or night) and weather (sunny/cloudy) will result in incorrectly detecting abnormality. In order to prevent the surrounding environment from affecting detection, a plate called a calibrator (Fig. 7), which is the reference for correcting brightness, is placed within the recording range and the brightness value of the light and dark parts is converted to a prespecified brightness value every time recording is done in order to correct brightness of each pixel.

(b) Body rock and speed stretch correction

The appropriate image cannot be obtained by simply merging the frames taken by the line scan camera into an image for one car due to changes in running speed (acceleration/deceleration) and body/bogie vibration.

In this development, we worked to improve correction accuracy by creating in advance images that correctly reflect actual body shape, which are references for correction, and performing imaging position correction by individual pixel on the images recorded.

(3) Verification of detection performance by abnormality simulation temporary setup tests

As previously mentioned, judgment is made in this system by the difference in brightness (differential distance value) of a specified range in images at inspection for abnormalities and images of normal condition, so setting differential distance value threshold is an important point.

A temporary structure (Fig. 8) simulating abnormalities such as bolt and round connector looseness and equipment box inspection cover handle rotation was equipped under the floor of a vehicle, and test runs were made to pass by the system and verify abnormality detection performance.

Fig. 9 shows an example of verification for an equipment box inspection cover handle. We found that the differential distance value changes when handle rotation angle is changed. We have set the abnormality detection target for the handle to be “displacement of 15º or more”, and detection of abnormalities is possible by defining the differential distance value threshold from change in differential distance value when degree of abnormality is changed. And by setting threshold values similarly for cocks, round connectors, and bolts, we achieved the anticipated targets as shown in Table 1.

2.4 User Interface

Places inspected on rolling stock are set in advance as evaluation rectangles, and approx. 4,000 rectangles are set per car (Fig. 10). An interface was designed so inspection results are automatically updated and displayed as an inspection history list on the

terminal (Fig. 11). When an abnormality is judged to be present, an image of that and an image of normal condition are displayed for inspection experts to compare and confirm visually the actual status of the rolling stock (Fig. 12).

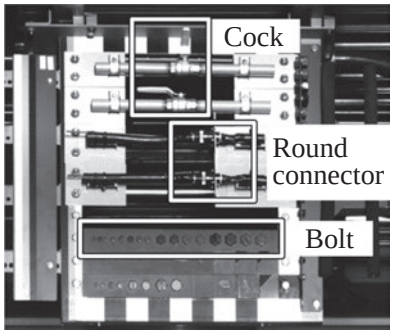

Fig. 8 DMockup Used for Verifying Abnormality Detection Performance

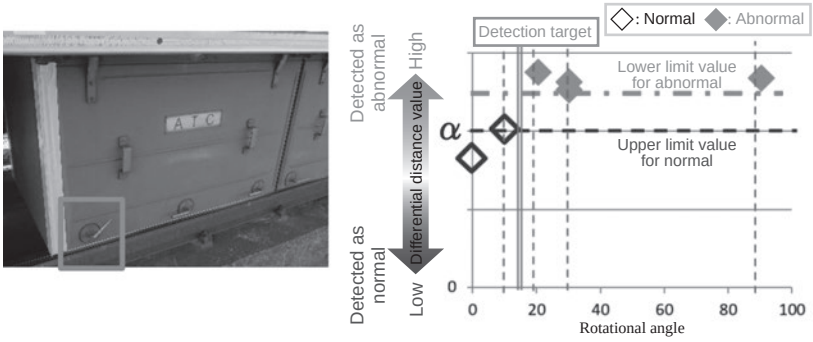

Fig. 9 Change in Differential Distance Value when Angle of Equipment Box Inspection Cover Handle Changed

Table 1 Abnormality Simulation Temporary Setup Test Results

Item inspected	Detection target	Abnormality simulation condition	Evaluation	Notes
Cock	30° displacement	Displacement (10°, 30°, 90°)	○	
Round connector	15° rotation	Rotation (15°, 45°, 90°)	○	
Bolt (size: M16/12/8/6)	5° looseness	Looseness (5°, 15°, 30°)	△	10° or greater can be detected for M6.
Equipment box inspection cover handle	15° displacement	Displacement (10°, 30°, 90°)	○	

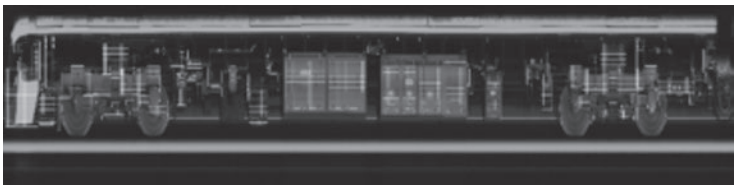

Fig. 10 Setting of Evaluation Rectangles

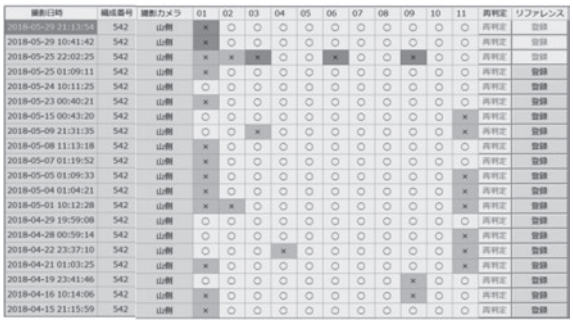

Fig. 11 Inspection Results History Display Screen

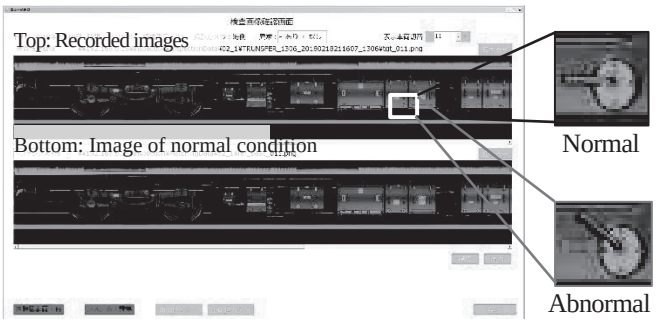

Fig. 12 Inspection Image Confirmation Screen

3. Conclusion

Basic technical investigation, verification by test unit construction and installation, prototype development, and algorithm improvement were conducted over about five years from fiscal 2012. Development is complete for a system to record and inspect the underside of rolling stock, and we are currently at the trial operation stage. In trials, we will verify aspects such as ease of use and continue to work to make improvements.

In closing, we would like to take this opportunity to express our deep gratitude to those who have provided cooperation in this development.