Special edition paper

Development of a New Scour Detector that Enables Monitoring of Pier Soundness


Takenori Keyaki* Osamu Suzuki**

JR East is constantly monitoring inclination angle of piers at risk of scour under flood conditions using scour detectors. Once that inclination exceeds a predetermined value, train operation control such as stopping trains and limiting speed is conducted. Scour can, however, gradually proceed without inclination of piers, with inclination suddenly occurring at a certain point, so constant monitoring of the soundness of piers is desirable. In light of that, we are working in this R&D project to develop a new scour detector that has a monitoring function for pier soundness based on indicators such as train-induced vibration in addition to the inclination detection function. We have completed verification of the inclination detection function, and verification is currently underway on a method of assessing soundness of piers using train-induced vibration and microtremors under flood conditions based on measurement data. A new practical scour detection system based on the results of this research has been deployed from fiscal 2013.

●Keywords: Scour, Train-induced vibration, Monitoring, Sensor

1 Introduction

Damage to piers by scour is a type of damage where the earth at the foundation of a pier is washed out due to flooding. Signs of scour damage are difficult to detect visually, and once it occurs, it often leads to serious accidents and disruption of transport. In order to prevent that, JR East has taken countermeasures both in construction and in operation. Those include foundation consolidation and train operation control based on measurement using water gauges that monitor river water level and clinometric type scour monitoring devices that can detect even slight pier inclination.

However, even when trains are stopped immediately after such damage to a pier by scour occurs, long-term train service cancellation will result, and large costs will be incurred for repairs. Scour can gradually proceed without inclination of piers, with inclination suddenly occurring at a certain point. So, if we can detect scour at an early stage, that will lead to improved safety as well as improved operation stability and cost reduction. It is thus desirable to constantly monitor the soundness of piers on scour and lowering of the riverbed.

However, current scour detectors only have a function to warn that pier inclination has exceeded the threshold value.[1] In order to assess the soundness of a pier, we usually apply a method using the natural frequency of the pier that is gained from the response waveform by forcedly vibrating the pier (hereinafter, "Shock Vibration Docimasy"[2]). This method uses the tendency for the natural frequency of a pier to decrease as phenomena such as scour deteriorate the soundness of that foundation's pier. But this test cannot be carried out for constant monitoring as it involves dangerous work in high places handling a heavy suspended weight of around 30 kg to vibrate a pier.

In this R&D project, we thus developed a new scour detector that has a monitoring function for pier soundness using train-induced vibration and microtremors under flood conditions in addition to the inclination detection function. We have completed verification of the inclination detection function, and verification is currently underway on a method of assessing soundness of piers using train-induced vibration and microtremors under flood conditions based on measurement data. This article will report on the development results so far and efforts for introducing the detector for practical use.

2 Background and Outline of the Development

2.1 Overview and Issues of the Current Scour Detector

JR East currently uses clinometric type scour monitoring devices (Fig. 1) installed to piers at risk of scour. This is a detector that constantly monitors angles of pier inclination in the direction of the bridge axis (parallel to the rails) and in the direction at a right angle to the bridge axis (right angle to the rails). It warns if the inclination angle continues to exceed the predetermined threshold values (currently 120 seconds).[1] Those threshold values are the speed limitation value and the operation suspension value, which are calculated based on track maintenance standard values. Sensors currently in use have a resolution finer than 1/100° because the threshold values are often stipulated at less than 1°. This sensor is based on the same function principle as a bubble level, whereby the movement of the bubble is output as voltage change between terminal pins of the sensor body.[3] Start of practical use of this device in fiscal 2000 has improved safety against scour.

This sensor does have an issue, however, in that its sensing part fails easily. The detector system as a whole also has issues such as the system terminal being unable to indicate the angle of pier inclination output by the sensor and malfunction at lightning strikes. The system further has a functional issue in

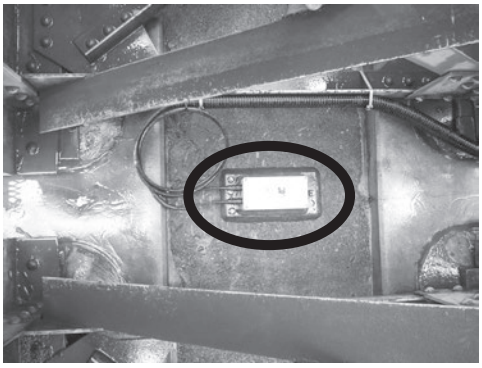

Fig. 1 Current Scour Detector

*Disaster Prevention Research Laboratory, Research and Development Center of JR East Group
**Facilities Dept., Akita Branch Office (previously at Disaster Prevention Research Laboratory)

that it cannot monitor the soundness of piers, as described above. Under those circumstances, developing a new scour detector had been demanded.

2.2 Concept of the New Scour Detector

In this R&D project, we aimed at providing the new detector with a function for monitoring pier soundness both under normal conditions and under flood conditions. That is in addition to the function current scour detectors have for measuring the angle of pier inclination and issuing a warning in the event that angle exceeds a certain threshold value. Studies of those functions proceeded based on the following concept. Note that we studied how to assess pier soundness under normal conditions and under flood conditions separately.

(1) Detection of pier inclination

As is currently done, the new detector has a function to issue a warning when the angle of pier inclination exceeds a predetermined threshold value. To easily identify inclination development even before warning, we decided to work on system specifications where the inclination angle values could be indicated on system terminals.

(2) Pier soundness assessment under normal conditions

One of the current methods of pier soundness assessment to conduct Shock Vibration Docimasy. But, these cannot be carried out for constant monitoring, as is explained above. But, if we can use train-induced vibration instead of a suspended heavy weight as the oscillation source, pier soundness might be assessable constantly and more easily than by Shock Vibration Docimasy.

Pier soundness assessment using train-induced displacement was studied already in the Japan National Railways era.[4] Large displacement means piers vibrate easily, demonstrating lower pier soundness. On the other hand, train-induced vibration varies much according to variables including type of car such as locomotive and EMU, passenger load factor, and velocity. It has proved difficult to accurately assess pier soundness based on the amplitude of individual piers, so this method currently not used.

However, it is now technically possible to continuously obtain large amounts of data by constant monitoring. This means there is a possibility of pier soundness assessment whereby values even from considerably varied data are statistically processed and checked for presence of remarkable change. We therefore aimed in this R&D project to assess pier soundness by statistically processing displacement values obtained from measurement values of sensors at trains passing.

(3) Pier soundness assessment under flood conditions

In pier soundness assessment done to determine the possibility of train operation resumption after suspension due to flooding, the aforementioned assessment using train-induced displacement cannot be applied. We thus aimed to assess pier soundness under flood conditions based on the change of microtremors constantly measured by sensors.

The system concept studied in this R&D project is summarized in Fig. 2. Introduction of the system would have a secondary effect of cost reduction in total including installation cost and maintenance cost by enabling multiple functions of pier inclination detection and pier soundness assessment using a single type of sensor.

3 Selection of the Sensor

We studied sensors that could meet the conditions of the concept explained in the previous chapter. The new scour detector needs to be able to simultaneously measure inclination angle and vibration at a train passing. The bubble level sensor used for the current scour detectors often fails, and measurement of train-induced vibration is difficult with that bubble level sensor. We thus studied the specifications of the sensor used for this development in terms of the following issues.[5]

(1) Inclination detection performance

As detection of pier inclination angle is directly related to train operation, that detection must be highly stable. The sensor thus needs to have excellent temperature characteristics, noise resistance (against spike noise, etc.), and high resolution when converting to angle.

As well as inclination sensors, acceleration sensors also can be used to find inclination angle. When a pier tilts and a horizontal acceleration sensor tilts too, the sensor detects the acceleration ($G\sin\theta$) according to the inclination angle (θ), from which inclination angle can be calculated.

For that reason, we examined both inclination and acceleration sensors.

(2) Measurement range

The sensor must be able to measure train-induced vibration and microtremors under flood conditions. In addition, it would be favorable if the sensor could measure seismic acceleration for future pier soundness assessment in earthquakes too and generate just minimal self-noise at the same time.

(3) Frequency characteristics

Train-induced vibration includes many high vibration frequency components, and those might inhibit measurement of the exact waveform. To prevent that, the sensor needs to have performance where it can measure in a wide bandwidth to some extent.

We narrowed down currently available sensors to two types that meet the above-mentioned conditions. Then, we test-installed those to actual bridges to finally select the sensor to be used.

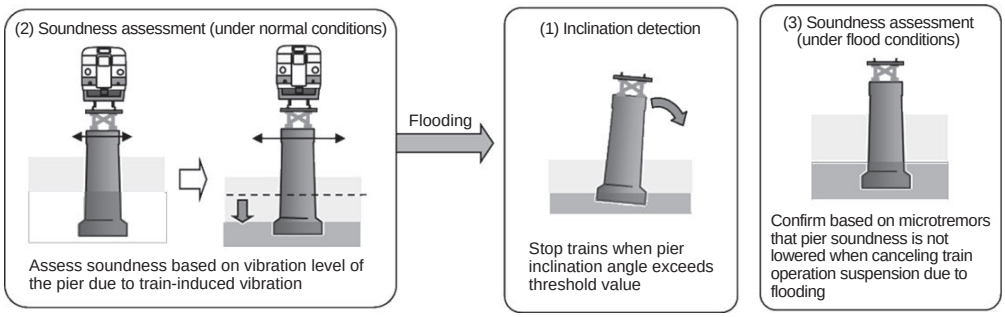

Fig. 2 System Concept

4 Overview and Results of Field Tests

In order to study and develop a new scour detector taking into account actual data, we installed sensors to actual bridges and collected data. Based on the collected data, we assessed measurement accuracy of pier inclination angle and studied method for assessing pier soundness.

4.1 Test-installation of the Sensors

Bridges used for the test are shown in Table 1 and Fig. 3. Sensors were installed to three piers: 1P (the first pier from the point of origin) of Bridge A and 1P and 2P of Bridge B. Upon installing the two types of sensors (Sensor 1 and Sensor 2, which were narrowed down as explained in the previous chapter) and the bubble sensors used for current scour detectors to the top of those piers, we carried out measurement. To Bridge A, ring type displacement gauges (Fig. 4) were also installed for four days. Data for Bridge B could be compared with the water level data of an existing water gauge.

4.2 Assessment of Pier Inclination Angle

It is said that angle of pier inclination slightly changes every day, even when there is no scour. The cause of that change is assumed to be eccentric force acting on piers due to the difference of friction coefficient (degree of insufficient movability) of individual shoes when temperature change and other factors cause displacement of girders.[6] We thus checked whether the sensors could correctly detect such daily change of inclination angle in order to verify the accuracy of the angle of pier inclination the sensors measured.

We calculated the inclination angle in the direction of the bridge axis from acceleration that was measured by the sensors on Bridge A, and we compared that to the inclination angle calculated from the displacement measured by the ring type displacement gauge (Fig. 5). The sampling interval of that data was 30 minutes. The results of comparison showed that the measurement value by Sensor 1 was more accurate than the value by Sensor 1. We also found that Sensor 1 had accuracy equal to that of the bubble level sensor used for current scour detectors.

By carrying out measurement using the sensors on Bridges A and B for approx. one year, we confirmed that Sensor 1 could measure better than Sensor 2 in comparison with the bubble level sensor.

We thus decided to use Sensor 1 for the new scour detector, and we continued the study with the measurement results from using Sensor 1.

4.3 Assessment of Pier Soundness

As explained in chapter 2, soundness of piers is judged based upon train-induced vibration under normal conditions and microtremors under flood conditions. For judgment, it is necessary to extract the target waveform from the waveform measured by the sensor and apply assessment criteria to that target waveform. We thus studied a method of waveform processing and assessment criteria.

4.3.1 Study on the Method of Waveform Processing

The waveform of the acceleration measured by the sensor is a mixture of train-induced vibration, seismic movement, and other microtremors. For soundness assessment, the waveform obtained by the sensor thus needs to be divided into individual waves.

We therefore devised an automatic waveform discrimination algorithm and verified its applicability based on actual measurement data.[7] The waveform discrimination flow consists of two steps of discrimination: that by acceleration RMS value and that by frequency ratio (Fig. 6). We intend to stipulate the necessary discrimination threshold values per pier.

Table 1 Specifications of Bridges Used for Field Tests

Spec item	Bridge A	Bridge B
Completed in	1967	1960
Upper structure (span) (girder type)	22.3 m steel deck plate girder	19.2 m steel deck plate girder
Lower structure (material) (form) (height)	RC pile foundation 7 m	RC spread foundation 8 m
Measurement period	Underway from September 2011	Underway from October 2012

Fig. 3 Bridges Used for Field Tests (left: Bridge A, right: Bridge B)

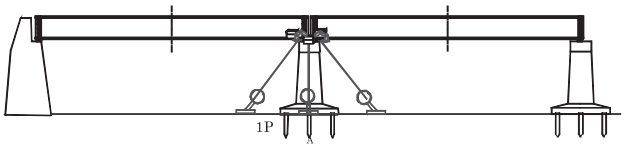

Fig. 4 Installation of Ring Type Displacement Gauges

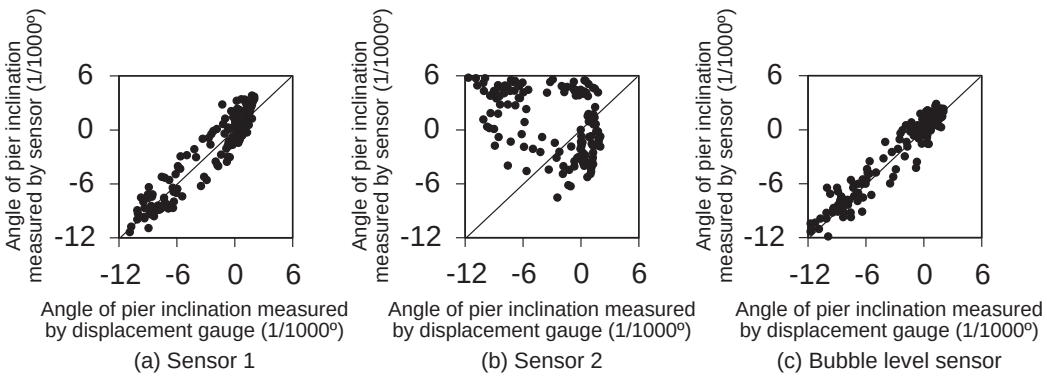

Fig. 5 Assessment of Angle of Pier Inclination

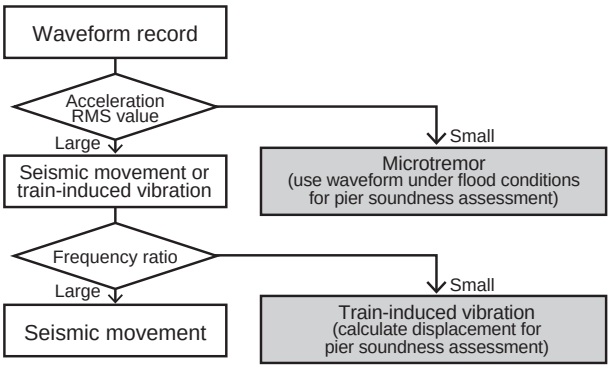

Fig. 6 Automatic Waveform Discrimination Flow

(1) Discrimination by acceleration RMS value
As the index to differentiate microtremors from seismic movement and train-induced vibration, we used the acceleration root mean square (RMS) value that indicates level of amplitude. Based on the fact that the RMS value is large with train-induced vibration and seismic movement and small with microtremors, we could discriminate waveforms of microtremors from those of others.

As an example of waveform, the acceleration waveform measured with 1P of Bridge B is shown in Fig. 7. The amplitude of microtremors is clearly smaller than those of train-induced vibration and seismic movement, allowing discrimination.

(2) Discrimination by frequency ratio
While the spectrum of train-induced vibration includes many components in a high frequency bandwidth due to the effect of wheelbase (distance between axles) of the vehicle, the spectrum of seismic movement includes many components in low frequency bandwidth due to ground characteristics. As an example, Fig. 8 shows measurement results for 1P of Bridge B. It shows that the bandwidth of major spectrums is clearly different between train-induced vibration and seismic movement.

Based on that, we defined as frequency ratio q how many low frequency components are included in the total spectrum. We used that to differentiate between train-induced vibration and seismic movement, as follows.

$$q = \frac{I_l(\omega)}{I(\omega)}$$

Here,

$I(\omega)$ is the accumulation of power spectrums of all frequency bandwidths, and

$I_l(\omega)$ is the accumulation of power spectrums of low frequency bandwidths only.

This definition allows differentiation between small frequency ratio as train-induced vibration and large frequency ratio as seismic movement.

4.3.2 Pier Soundness Assessment under Normal Conditions

Pier soundness under normal conditions is assessed based on vibration at trains passing. As explained in chapter 2, the procedure is (1) calculation of displacement from value measured by a sensor at a train passing, and (2) assessment of pier soundness by statistically processing displacement. So, we examined individual phases based on the actual measurement data.

(1) Calculation of displacement at a train passing
As the method of estimating train-induced displacement, we examined the following two methods.

[Method 1]
Assuming that the pier revolves around a point, calculate its displacement from the inclination angle calculated by the sensor (Fig. 9).

[Method 2]
Calculate displacement by the irregular vibration theory[8] (a theory approximate to displacement ≃ γ × acceleration).

Fig. 10 shows, for displacement of Bridge A at a train passing, comparison by those methods of the displacement calculated from the measurement results by the sensor and the measurement results by the ring type displacement gauge. The data is plotted by individual passing train in the measurement period (four days). As a result, we found that Method 1 is more appropriate in the direction of the bridge axis while Method 1 is more appropriate in the direction at a right angle to the bridge axis.

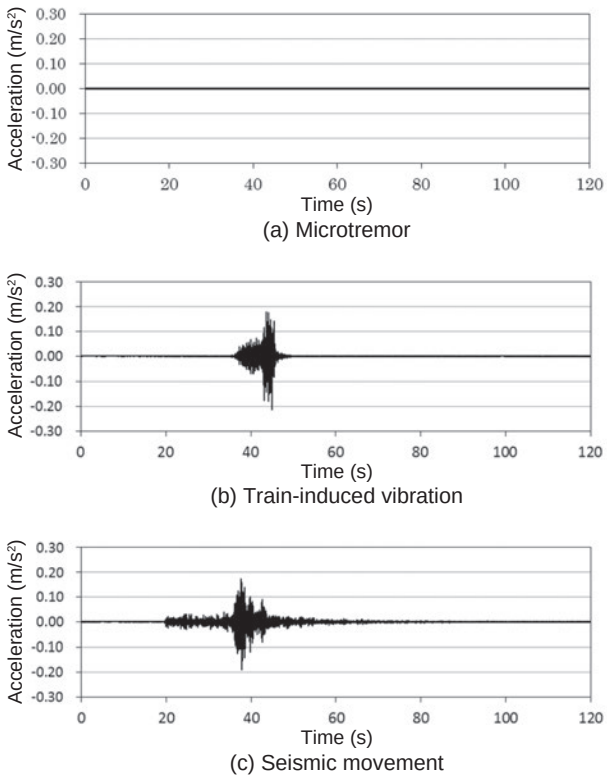

Fig. 7 Examples of Waveforms

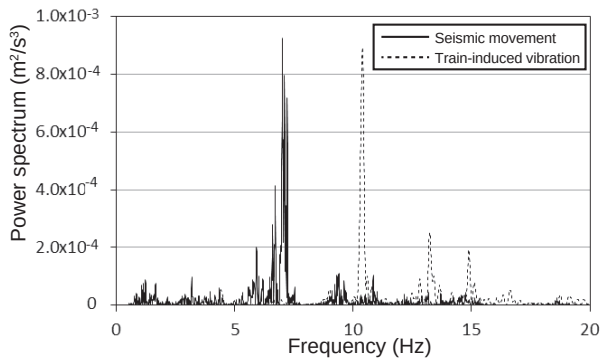

Fig. 8 Examples of Spectra of Train-induced Vibration and Seismic Movement

(2) Pier soundness assessment

Fig. 11 is a scatter diagram of the mean values per day for maximum displacement at a train passing on 1P of Bridge B estimated from the measurement results by the sensor (mean displacement per day). While the values in the direction at a right angle to the bridge axis changed much on the day of track maintenance, there were no changes around the bridge including in pier soundness on the other days of the period, and we found no major change of mean displacement per day either.

Such measurement in a continuous longer period will likely allow estimation that some change occurred in pier soundness in cases when the mean displacement per day changes much. We will thus continue collecting data for verification.

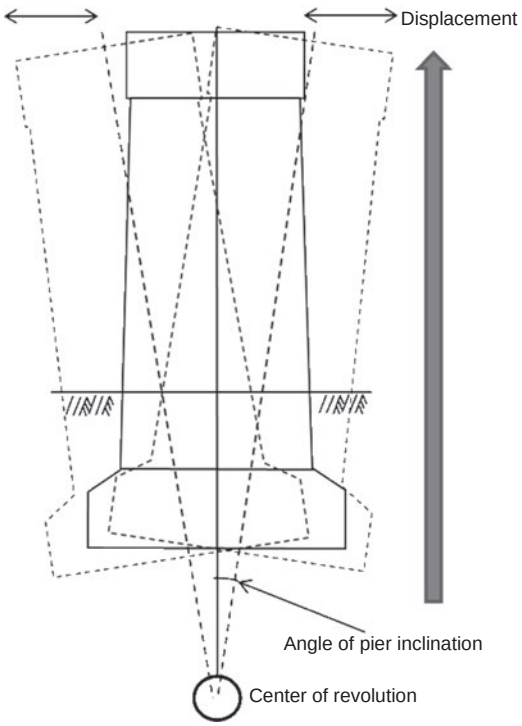

Fig. 9 Displacement Calculated from Angle of Pier Inclination

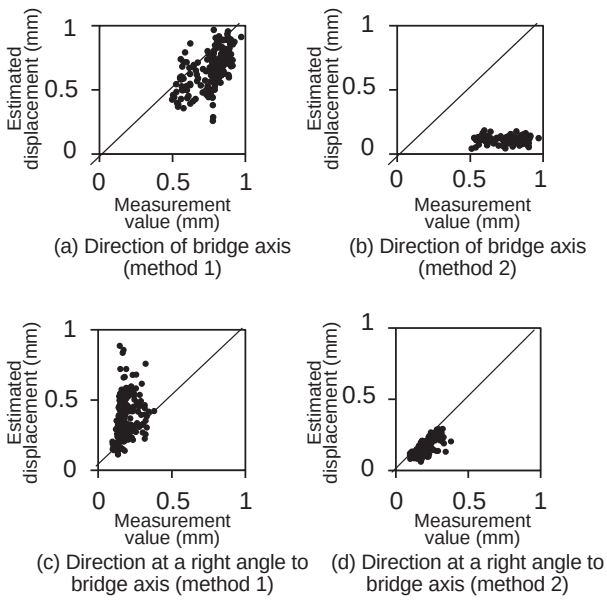

(a) Direction of bridge axis (method 1)

(b) Direction of bridge axis (method 2)

(c) Direction at a right angle to bridge axis (method 1)

(d) Direction at a right angle to bridge axis (method 2)

Fig. 10 Relation Between Displacement Estimated from Sensor Measurement Results and Displacement Measured by Ring Type Displacement Gauge

4.3.3 Pier Soundness Assessment under Flood Conditions

If we can assess pier soundness according to microtremors under flood conditions, such assessment will be likely to be used for decisions on train operation resumption after operation suspension according to water level. We thus focused on the change of amplitude of microtremors under flood conditions in the information of microtremors extracted from measurement data. Fig. 12 shows an example of the change of amplitude of microtremors (acceleration RMS value for 20 seconds) under flood conditions by a typhoon with Bridge B.

The figure indicates that amplitude of microtremors increases as water level to girders decreases (river water level rises). This suggests the possibility that pier soundness could be estimated based on the relation between water level and amplitude of microtremors, but data of cases of flooding with bridges where sensors were tested is insufficient, so detailed analysis is currently difficult. We thus plan to continue measurement under flood conditions.

5 Consideration of System Specifications with a View to Practical Use

In the R&D project so far, we only have gained verification results for bridges of which the steel upper structure is relatively lightweight and the reinforced concrete (RC) lower structure is low as shown Table 1. However, those results suggest that a new scour detector with a pier soundness assessment function in addition to a inclination detection function equivalent to

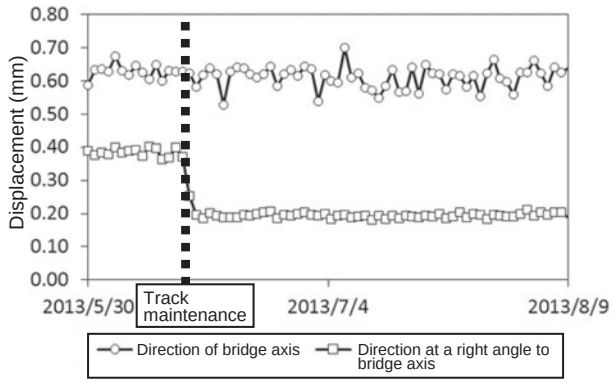

Fig. 11 Change of Maximum Displacement (Daily Mean) of Train-induced Vibration

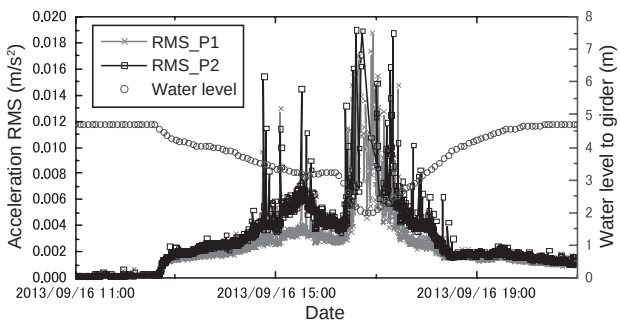

Fig. 12 Change of Amplitude of Microtremors under Flood Conditions

that of current detectors could be put into practical use. That functionality could be achieved by continuously measuring displacement due to train-induced vibration and other factors by the sensor.

Taking into account issues with the current scour detector explained in paragraph 2.1, we examined system specifications with a view to putting that detector into practical use. In the unit to be installed on the pier (hereinafter, "Sensor Box"), Sensor 1 type sensors, which showed good result in the field tests, are arranged in the directions of bridge axis and at a right angle of bridge axis (Fig. 13). In order to minimize impact of electric noise such as from lightning, we decided to place a media converter box near the Sensor Box to convert electric signals into optical signals. The media converter box is connected using optical fiber to the control panel, which is installed near the bridge and processes data. Up to seven Sensor Boxes can be connected to one control panel.

The system will be connected to the Prevention of Disaster Alarm System (PreDAS) as before, and it will issue warnings when inclination angle exceeds a predetermined threshold value continuously for 120 seconds. Meanwhile, the newly added function to indicate pier soundness and function to indicate angle of pier inclination PreDAS cannot output were set up to display on separate maintenance information indication terminals for field maintenance departments (Fig. 14). Table 2 shows a comparison of functions between the current and new scour detectors.

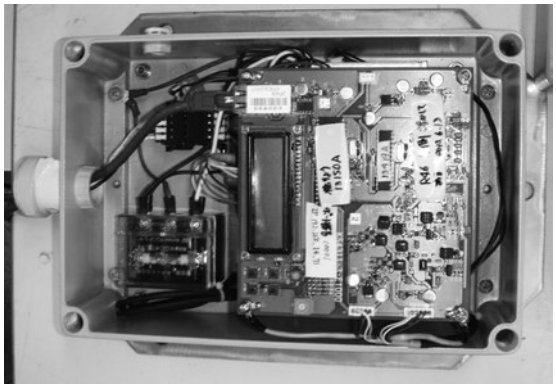

Fig. 13 Sensor Box of Prototype System

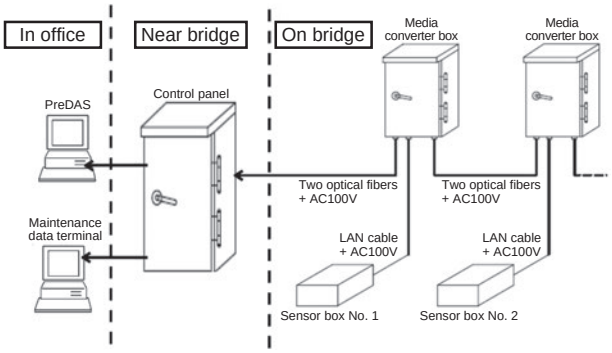

Fig. 14 Overview of the Prototype System

Table 2 Comparison of Functions of Current and New Scour Detectors

Function	Current scour detector	New scour detector
Operation control (PreDAS display)	Yes	Yes
Display of pier inclination angle	No	Yes
Soundness assessment based on train-induced vibration	No	Yes (Criteria under consideration)
Soundness assessment under flood conditions	No	Yes (Criteria under consideration)

6 Future Development

Based on the results of this R&D project, we installed and put into use new scour detectors on a total of eight piers of four bridges on conventional lines as pilot installation in fiscal 2013. Taking into account the operation results of those new detectors, we plan to study the final specifications of a mass-production system.

We are also working on to determine whether the results of this R&D project can be applied to bridges of forms for which we have not verified yet. Based on that determination, we are planning to replace the current scour detectors with the newly developed ones. Moreover, we will continue to further study subjects such as criteria for pier soundness assessment.

Reference:

1) Yosuke Masui, Osamu Suzuki, "Development of a Soundness Evaluation System for Bridge Substructures", *JR East Technical Review*, No. 14 (2009): 65 - 68
2) Akihiko Nishimura, Shiro Tanamura, "A Study on Integrity of Railway Bridge Foundation [abstract in English]", *RTRI Report*, Vol. 3, No. 8 (August 1989): 41 - 49
3) Noritoshi Kobayashi, Makoto Shimamura, "Kyokyaku Senkutsu Monitoring Shuho no Kaihatsu [in Japanese]", *JR East Technical Review*, No. 3 (May 2003): 49 - 52
4) Japan National Railways, *Kenzobutsu Kensa Hyojun Kaisetsu* [in Japanese], (The Japan Railway Civil Engineering Association, 1966)
5) Koichi Sugisaki, Masato Abe, Satoshi Koshimizu, "Kansei Keisoku o Mochiita Tetsudo-kyo Monitoring no tameno Sensor Seino Hyouka [in Japanese]", *Journal of JSCE* A1, Vol. 69, No. 2 (2013)
6) Satoshi Horiai, Koichi Sugisaki, Masato Abe, Makoto Abe, Yosuke Masui, "Hen'i ni Chakumoku-shita Ko Tetsudoukyo no Monitoring ni kansuru Kisoteki Kenkyu [in Japanese]", *Journal of Constructional Steel* (November 2010)
7) Osamu Suzuki, Koichi Sugisaki, Masato Abe, Makoto Shimamura, "Development of Scour Monitoring Device for Bridge Pier Using Inertial Sensor [abstract in English]", *Proceedings of the 29th Sensor Symposium on Sensors, Micromachines, and Application Systems* (2012)
8) Masato Abe, Yozo Fujino, "Fast Evaluation Method for Seismic Displacement Response Based on Random Vibration Theory [abstract in English]", *Journal of JSCE* A, Vol. 65, No. 1 (February 2009)