Special edition paper

Development of an IP-Network-based Signal Control System for Automatic Block Signals


Reiji Ishima* Kazumi Hayakawa**

JR East has developed a network-based signal control system where signals, signal houses and other signaling devices are connected with optical fiber cables to control those devices using digital data transmitted through those cables. The first system was put into use in 2007. We have further applied the technologies used for this network signal control system to signals, track circuits, ATS-P (Automatic Train Stop with Pattern, i.e. Automatic Train Protection) and other signaling devices and developed an IP-network-based signal control system for automatic block signals with higher reliability and functionality. In this development launched in 2005, we have finished development of a practical system, and we completed long-term field tests in January 2011. The developed system is now at the phase where we are putting it into practical use.

●Keywords: IP-network-based signal control system, Non-insulated track circuit, ATS-P

1 Introduction

Signaling devices including block signals, track circuits and ATS-P for automatic block signals have traditionally been distributed along the wayside and endured harsh environments. The devices also face the following issues.

(a) Simplex system with no backup system in case of equipment failure
(b) Complicated relay circuit logic and wiring work
(c) Insufficient information about maintenance and failures

With signaling devices between Tokyo and Takao stations on the Chuo line, we achieved stable operation of the signaling system by making the control system of block signals, track circuits and ATS-P duplex and centralizing logic units in the signal house for a better equipment housing environment. But, a huge number of signal cables are laid from the signal house to the individual devices, and those cables remain simplex.

In light of that, we have developed an IP-network-based signal control system for automatic block signals with the aim of the following:

(a) Improving reliability by constructing a duplex system
(b) Reducing cable laying and wiring work
(c) Improving maintainability by enhancing maintenance and failure information.

To accomplish that, we applied IP-network-based signal system technology. That technology connects signals and other signaling devices in the station yard and the signal house with optical fiber cables and controls the devices using transmitted digital data. Development started in April 2005, and we are now at the final phase of putting the system into practical use after development of practical technologies through improvements and long-term field tests.

2 Basic Concept of the System

In the IP-network-based signal control system actually installed to Ichikawa-Ono Station on the Musashino line in February 2007, a logic controller placed in the signal house controls field controllers (FCs) that are built in or attached to field signaling devices via an Ethernet Passive Optical Network (E-PON) optical transmission system, thereby controlling the signalling devices (Fig. 1).

The basic concept of applying this technology to the signaling devices between stations is as follows.

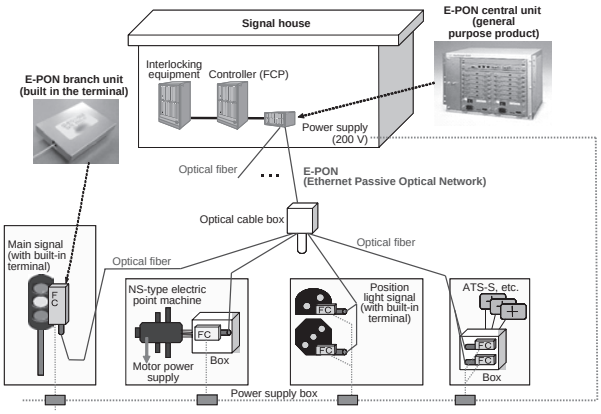

Fig. 1 Configuration of IP-Network-based Signal Control System

(1) All control logic of block signals, track circuits, ATS-P and other signaling devices are centralized in one Logic Controller (LC).
(2) Signaling devices between stations are located in a set per block signal. Field devices are distributed in the station yard, so Field Controllers (FC) are installed per field device.
(3) Transmission between the LC and FCs is performed through E-PON as done in the system at Ichikawa-Ono Station. The transmission procedure is the same too. Optical cables from the station signal house are centralized in an optical cable box near the block signals where the cables are branched to FCs by using optical splitters.

*Advanced Railway System Development Center, Research and Development Center of JR East Group
**Network Signal Group, Tokyo Electrical Construction and System Integration Office
(previously at the Advanced Railway System Development Center)

3 System Overview

Fig. 2 illustrates the basic system configuration of the IP-network-based signal control system for automatic block signals. The system consists of an LC, FCs, an IP network, a remote monitoring control system and maintenance terminals.

3.1 Logic Controller (LC)

An LC is equipment that incorporates control logics of block signals, track circuits and ATS-P in a failsafe duplex control unit. It transmits and receives control and display information to and from FCs via the IP network and performs logic processing such as decision on which signal aspects to display. The control period of both the LC and FCs is 200 ms, so the control and display information is exchanged in sync with this period. The LC is placed in the signal house.

In the arrangement for the practical system, we included the block control at the entrance side of a station in the scope of control of the LC, which can be set as desired. (Ex. In the section of Station A - Station B - Station C - Station D, the LC of Station B controls the outbound block between Stations A and B and the inbound block between Stations B and C; the LC of Station C controls the outbound block between Stations B and C and the inbound block between Stations C and D.)

The LC was developed through simultaneous development by two manufacturers. The developed products were produced at each manufacturer, both based on computerized interlocking equipment. Fig. 3 shows photos of the LCs by each manufacturer.

3.2 Field Controller (FC)

An FC is failsafe duplex control equipment that transforms the control information from the LC via the IP network into electronic signals and collectively controls block signals, ATS-P etc. It also transmits to the LC as display information the clear/occupied information of non-insulated track circuits and the input relay contact information.

Fig. 4 shows the FC box. The box housing the FC is sealed to prevent penetration of dust and other foreign objects. Its internal temperature is specified as -10 to +60°C in the specification requirements. Dual fans that are set at the top of the box generate forced circulation of air to bring about even temperature and to keep the internal temperature under +60°C by letting heat escape via radiator fins. As we are planning to introduce the system in the greater Tokyo area, the specified lowest temperature is -10°C.

Fig. 5 shows the units in an FC. The FC has a block structure for each half of the duplex system, and each block has a signal unit, track circuit units (for transmission and reception) and an ATS-P unit.

We have produced three types of FC for different usages: FC for SiGnal (FCSG), FC for BOundary (FCBO) and FC for InterFace (FCIF). An FCSG controls signaling devices in a block between stations (Fig. 4 and 5 each show an FCSG).

An FCBO installed in the signal house controls input and output of items for interlocking devices and existing ATS-P. An FCIF installed in the field indirectly controls devices of a single platform station (train approach indicators, block repeaters, etc.) using relays.

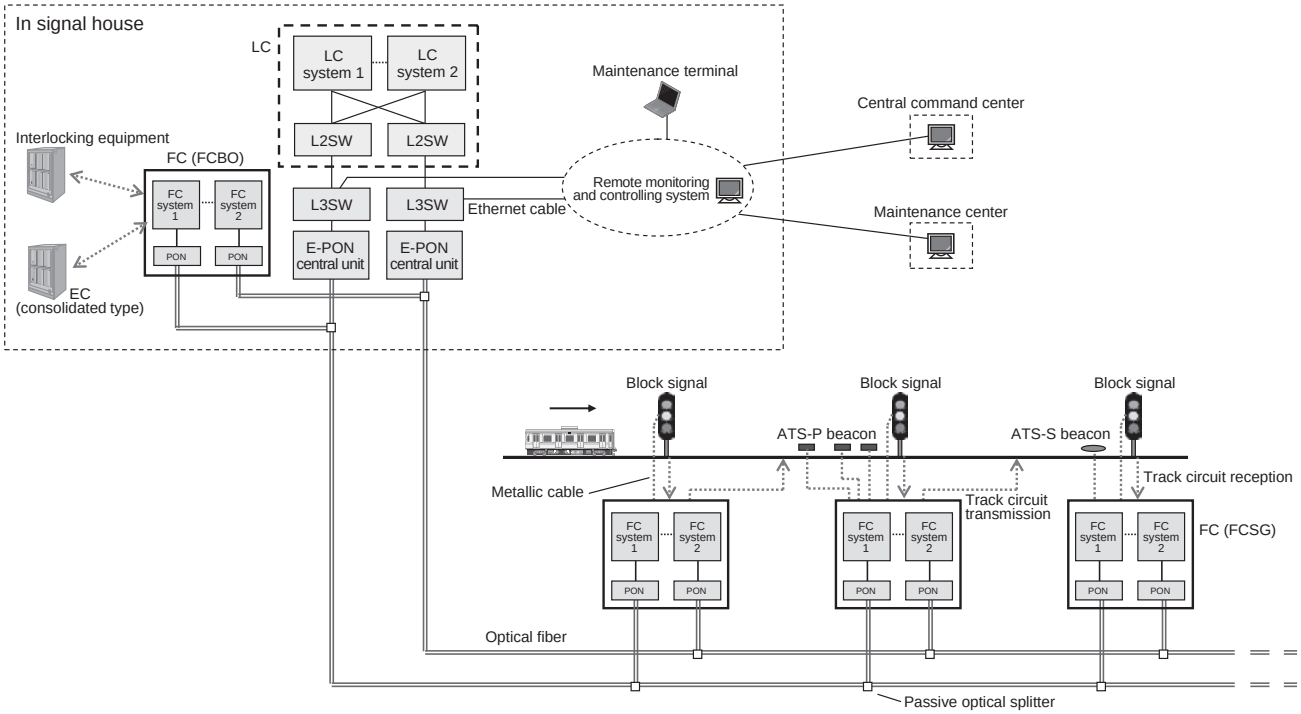

Fig. 2 Basic Configuration of IP-Network-based Signal Control System for Automatic Block Signals

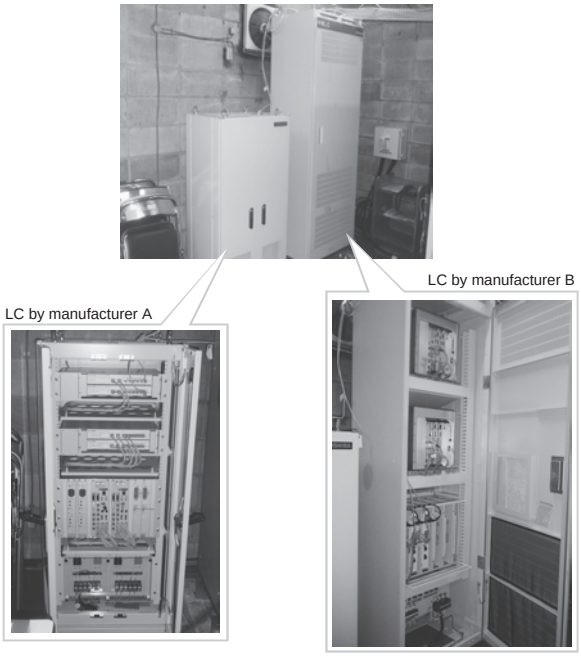

Fig. 3 Logic Controllers

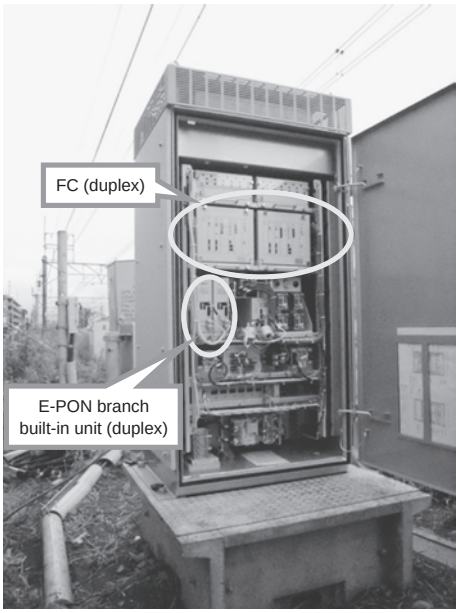

Fig. 4 Box Housing FC

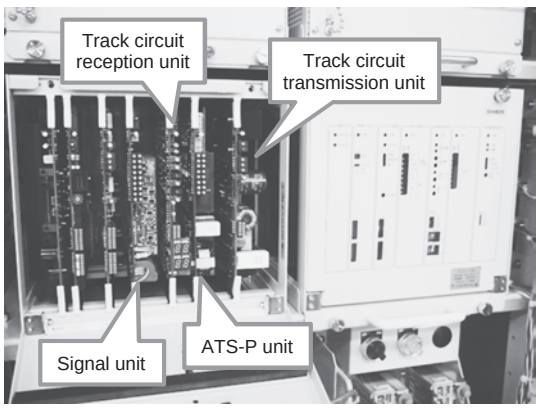

Fig. 5 Units in FC

The output retention time at power failure of the power supply unit of the FC (FCSG, FCIF) is more than 250 ms, while the recovery time of the relay-type power supply switch is less than 250 ms. The FC can thus continue operating even in case of power supply change due to accidental power failure.

3.3 IP Network

An LC and FCs are connected with optical cables and data is transmitted via the E-PON IP Network. The optical cables from the E-PON central unit in the signal house are branched to the optical cable boxes near the block signals with passive optical splitters leading to FC boxes, and there they are connected to an E-PON branch unit. Transmission between the LC and the FCs is failsafe transmission conforming to IEC 62280-1 (an international standard for failsafe transmission in closed transmission systems).

The LC, FCs and IP network of the IP-network-based signal control system for automatic block signals all have a duplex structure of high reliability. The system exchanges control and display information in a total of four routes: LC1–FC1, LC1–FC2, LC2–FC1 and LC2–FC2. Control is continued when transmission is achieved in either one of those four routes, achieving high system availability.

3.4 Remote Monitoring and Controlling System

The remote monitoring and controlling system consists of a remote monitoring server, a remote control server and remote monitoring and controlling terminals. The system is connected to the IP network via network devices (L3SW, L2SW).

The remote monitoring server accumulates status information of each device, journal data and steady state monitoring information of each field device. The remote control server transmits remote control information.

Remote monitoring and controlling terminals are connected to the monitoring server and the control server, working as the man-machine interface for remote monitoring and control. By operating the remote monitoring and controlling terminal, the central command center and maintenance centers can remotely obtain detailed monitoring information the same as in the signal house, and dispatchers can also make operations such as device reset for failure recovery. The terminals also have an interface to the steady state monitoring system, so failure information is sent to the steady state monitoring system too. The lines to the central command center and maintenance centers are internal dedicated lines of JR East. Fig. 6 shows the appearance and an example of a screen of the remote monitoring and controlling terminal.

To enable monitoring information to be checked even during on-site work in case of a failure, we also developed a portable remote monitoring and controlling terminal. Using unoccupied optical fibers to the FC allows checking of monitoring information via the IP network in the signal house. As that enables checking of the same monitoring information at the FC as in the signal house or in the central command center and maintenance center, more efficient communication is achieved in the event of a failure.

The remote monitoring and controlling system was at first operated in the system at Ichikawa-Ono Station, but we later made major improvements. At the practical use stage, one remote monitoring and controlling system can handle both the network-based signal control system in the station yard and the IP-network-based system for automatic block signals.

Appearance

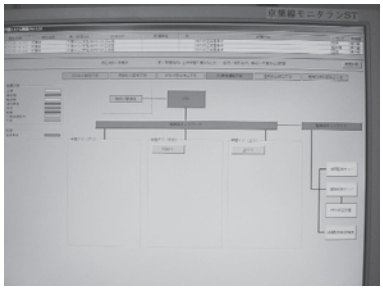

Sample screen
(displaying a screen for the system between stations)

Fig. 6 Remote Monitoring and Controlling Terminal

3.5 Maintenance Terminal

A maintenance terminal connects to the LC and FCs via the IP network to download software at modification and switch over the current program at upgrade. The maintenance terminal applications for the LC and FCs are stored in a notebook PC, but the LC and FC applications run exclusively, not simultaneously.

To handle jobs such as field tests before the network is built, the maintenance terminal can be operated connected directly to the on-site FC.

4 Overview of Functions

4.1 Train Detection

The setup of the train detection IP-network-based signal control system for automatic block signals is as follows.

(1) Track circuits are non-insulated track circuits. They use a central transmission system where the center of the track circuit sends out track circuit wave and FCs located at both ends of the track circuit receive the wave (see Fig. 2).

(2) FCs at both ends determine clear/occupied state of half of that track circuit (AT and BT) and send the result to the LC as display information.

(3) The LC collects AT and BT clear/occupied information and determines the state of that track circuit (clear, occupied, incorrect clear, incorrect occupied) including the track circuit tracing function.

We initially proceeded with the development with an AM modulation system for non-insulated track circuits that had showed good results in the underground section of the Sobu rapid service and Yokosuka lines. However, we adopted an MSK modulation system in the practical system taking into account prevention of vehicle induction failures. For prevention of vehicle induction failures, we use the same carrier frequencies of 5.8 kHz, 6.4 kHz, 7.05 kHz, 7.65 kHz and 4.15 kHz (backup) as those of the non-insulated track circuits between Tokyo and Takao on the Chuo line, and those have equal or better tolerance.

4.2 Signal Control

The setup of signal control of the IP-network-based signal control system for automatic block signals is as follows.

(1) The LC determines the aspects of individual block signals based on the status information of track circuits and train type information received from the FC display information and its own aspect sequence data. It also transmits the determined aspects to FCs as control information. A signal aspect function that allows trains to pass at higher speed is also brought about here.

(2) FCs output the signal aspect based on the control information received from the LC.

In the event that transmission between the LC and FCs is cut off, the system moves into failsafe control. There, FCs conduct signal unlit control.

4.3 ATS-P

ATS-P of the IP-network-based signal control system for automatic block signals performs the functions of the conventional encoder (EC) and wayside information devices. It does that by allocating those to the system components as follows.

(1) The LC has in total ATS-P data of all block signals within the control area as constants. It determines the output data from the wayside out of the aspect sequence and aspects of the individual block signals, and it transmits the determined data from the wayside to FCs as the control information. Conventional data transmission between ECs is replaced with internal processing within an LC as such data is centralized in the LC.

(2) The FC converts the data from the wayside received from the LC via the built-in ATS-P unit into the data from the wayside output to the beacon.

(3) The FC converts the ATS-P data from onboard input from the beacon into the data from onboard transmitted to the LC as display information.

(4) The LC receives the data from onboard from the FC and picks up the information on the sharply decelerating train to use for the signal aspect function that allows trains to pass at higher speed at signal control.

Transmission between the ATS-P unit of the FC and wayside beacons is serial transmission (FSK modulation, 1,200 bps), the same conventional transmission. One ATS-P unit can control up to eight beacons. If the transmission to and from the LC is off, FCs independently output a stop command as the failsafe control.

Beacons with built-in repeaters can be connected to the FC, and those beacons have a data transmission stop function (a function that stop data transmission from wayside devices to onboard devices).

Replacement is done by temporary installing a new beacon together with a conventional beacon. For the field test before use, the ATS-P data transmission stop function is used, and a data transmission stop setting is made to the relevant FC by a maintenance terminal.

4.4 Remote Monitoring Function

4.4.1 Failure Detection, Journal

An FC detects failures of its built-in units and ATS-P beacons and outputs the failure information via the network (failure information is stored at the remote monitoring server). That way, we can see the warning and status of units with the remote monitoring and controlling terminal. Similarly, the LC detects failures of its built-in units and makes failure information output.

Journals of the FCs and LC can be obtained with the remote monitoring control terminal. The journal for ATS-P data from the wayside transmission/data from onboard reception and failures can be gained with other information on signal aspect and track circuit status change etc. So, information on ATS-P is enhanced in comparison to the information from conventional ATS-P monitoring devices.

In order to assist analysis of those journals at the remote monitoring terminal, we also developed a time-chart display tool. It works offline and displays in a chart clear/occupied state of track circuits and change of signal aspects by reading the output journal file of the LC or FC.

4.4.2 Failure Identification Function

This system has the following failure identification function to identify the point of failure at an early stage in case of a failure.

The signal unit of the FC has a function to detect breakage of the cable to signals, and it can identify whether the failure is on the FC unit side or on the cable side in case of a signal failure. It also monitors current of signal lights, so it can identify failure of the LED unit by detecting current falling below the lower limit if the unit of a signal light fails.

The ATS-P unit of the FC has a current sensor for the line to each beacon. By detecting whether or not current is flowing in a failure, it can identify whether the failure is due to beacon failure or breakage of the cable.

Non-insulated track circuits have a function to use the alarm line in the track circuit cable from the FC to the rail to detect breakage of the cable using alarm line breakage. It can thus identify whether failure of the track circuit is on the rail side or on the cable side if the track circuit fails.

4.5 Other Functions

4.5.1 ATS-P Data Change Function while LC is Working

As the LC has ATS-P data in this system, the LC needs to be stopped for a data change for even one block. That means all devices in the control area of that LC have to be stopped, resulting in large impact on maintenance work.

In order to solve this problem, we developed a function where only ATS-P is stopped and the LC keeps working if just data is changed, provided that maintenance work procedures do not allow operation of trains in the maintenance time at night. With this function, maintenance work procedures are required only for blocking with data change, so we can limit the increase of burden for maintenance work procedures. If the change includes application change of the LC such as with increasing lines in the aspect data table, this function is not applicable; the maintenance work requires temporary stop of the LC as usual.

5 Development History

5.1 Development Organization

Development of the IP-network-based signal control system for automatic block signals started with JR East and four manufacturers. Development of the LC was done by two manufacturers simultaneously, while development of the FC was done by one manufacturer. General-purpose products of another manufacturer were used for the network devices. JR East prepared the specification requirements and the detailed specifications of devices, and the interface specifications were decided on through cooperation between JR East and manufacturers. The interface specifications have been disclosed to all manufacturers involved with the interface.

In this development project, JR East had to coordinate between manufacturers as needed and constantly manage the project as a whole. We came to keenly realize the difficulty of project management through that work.

5.2 Development Schedule

We launched development of the IP-network-based signal control system for automatic block signals in April 2005. After development and field tests of a prototype system, we started development of the practical system in April 2007. The start of the field tests of the practical system was in June 2008, but many failures and specification came to be changed. We thus continued field tests while taking measures and making modifications as needed, and we conducted field tests on the line scheduled for practical use. Finally, we finished field tests of the practical system in January 2011.

5.3 Field Tests

We conducted field tests of the IP-network-based signal control system for automatic block signals for the purpose of evaluating functions such as control and transmission performance, reliability and environmental resistance during long-term operation in the field environment.

Field tests using a prototype system were carried out in two blocks on the outbound line and three blocks on the inbound line near Kita-Kogane Station on the Joban rapid service line from November 2006 to January 2008.

Field tests using the practical system were carried out near Kita-Kogane Station on the Joban rapid service line, as was done for the prototype system, from June 2008 to October 2009. We further carried out field tests of the practical system in two blocks on the inbound line between Chiba-Minato and Soga on the Keiyo line, the line where we plan to put the system into practical use. Those tests were conducted from December 2009 to January 2011 by Tokyo Electrical Construction and System Integration Office, a construction office that is in charge of work for putting the system into practical use.

Finally we confirmed that the LC and FCs with the final specifications worked for a continuous period of time and functions such as control performance and transmission performance gained good evaluation results. Furthermore, the internal temperature of the FC box was confirmed to be kept within a 20°C difference from the external temperature. By that, it could meet the specification requirement of being less than 60°C at an external temperature of 40°C.

5.4 Environmental Resistance Tests

Since FCs have to withstand harsh installation environments along the track, they need to pass required type approval tests. Table 1 shows major environmental conditions for FC boxes. We carried out environmental resistance tests on the specified environmental conditions, and the products passed all of the tests.

Table 1 Major Environmental Conditions for FC Boxes

Internal temperature	-10°C to +60°C
Vibration resistance	10 - 500 Hz, 9.81 m/s2 (1G), according to JIS E3014 Type 2
EMC*	According to IEC 62236-4
Impulse withstand voltage	Power line 30 kV (1.2/50 μs, 10/200μs, 10/1000μs)
	Signal line 20 kV (1.2/50 μs, 10/200μs, 10/1000μs)

*EMC: Electromagnetic Compatibility

To check performance values in vibration resistance characteristic of an FC, we carried out tests under conditions twice as strict as those of the JIS standard (2G), and the developed products passed the tests.

We also conducted type approval tests for an LC in environmental conditions equal to the conditions in the station signal house, and the products passed the tests.

5.5 Safety Evaluation by a Third Party

The network-based signal control system that was put into practical use at Ichikawa-Ono Station underwent a safety review by the Railway Technology Research Institute (RTRI), and no problems were found in the concept of securing safety with the system. For the IP-network-based signal control system for automatic block signals, we underwent a safety review on the LC and FCs that are different from those of the system at Ichikawa-Ono Station. (Transmission between the LC and FCs followed that of the method of the system at Ichikawa-Ono Station, so evaluation had already been done.)

Each manufacturer of the prototype system and the practical system underwent review, and no problems were found in the concept of securing safety with the system.

5.6 Introduction Schedule

With an aim of minimizing transport disruptions due to signaling troubles in the greater Tokyo area, we are planning a a project which simplifies and integrates signalling systems in the greater Tokyo area within a radius of about 50 km. This project includes the introduction of the system covered in this article. The first line where it will be introduced is the Keiyo Line (between Tokyo and Soga), and we are now designing and constructing the system for the gradual start of operation from the end of fiscal 2012.

6 Conclusion

We have completed development of the IP-network-based signal control system for automatic block signals and are now at the stage of practical introduction. We hope that the system will become widely used and contribute to safety and stable transport in the greater Tokyo area.

Reference:

1) Reiji Ishima, Satoshi Fukui, "Eki Chukan Network Shingo Seigyo System no Kaihatsu [in Japanese]," *JREA*, Vol. 51, No. 8 (August 2008): 21–24
2) Tadao Miura, Gen Kogure, "Eki Chukan Network Shingo Seigyo System [in Japanese]," *Railway and Electrical Engineering*, Vol. 20, No. 2 (February 2009): 23–27
3) Japan Railway Electrical Engineering Association, *Shingo Gairon [in Japanese] ATS, ATC*
4) Reiji Ishima, Yamato Fukuta, Masayuki Matsumoto, N.Shimizu, H.Soutome, Minoru Mori, "A New Signalling System for Automatic Block Signal between Stations Controlling through an IP Network," *Proceedings of WCRR 2008* (May 2008)
5) Kazumi Hayakawa, Tadao Miura, Reiji Ishima, H.Soutome, H.Tamura, Y.Yoshida, "An IP-Network-based Signal Control System for Automatic Block Signal and its Functional Enhancement," *Proceedings of COMPRAIL 2010* (September 2010)