Interpretive article

Overview of Development of a Signal Control System

General Manager (Information Technology), Advanced Railway System Development Center,
Research and Development Center of JR East Group
Tamotsu Kato

For a railway, the signal control system is an essential structure to ensure safe and precise train operation. At the same time, we have to take various measures for transport improvement in light of the circumstances surrounding railways, while keeping stable operation. Furthermore, technical progress in information communication technology has been remarkable and is expected to go even further.

Thus, we are making efforts to innovate signal control in light of the latest technical trends, aiming at changing our system into the one that more easily brings about the feeling of security and reliability that passengers demand along with improvements in transport.

In this article, I introduce the direction of technical innovation in signal control and outline the related technical development.

1 Overview of Current Issues and Improvement of Transport and Signaling Facilities

1.1 Transport and Signaling Facilities of JR East

In fiscal 2007, the average total number of passengers carried by conventional and Shinkansen lines was approx. 16.9 million a day. The daily number of passenger trains was as many as 12,667 (as of March 15, 2008, excluding trains not in service). One of the essential systems to ensure safe and precise train operation in such a transport situation is the signal control system. And a tremendous number of major devices make up that system, as shown in Table 1.

Table 1 Major Signaling Devices (as of March 31, 2008)

Item		Number
Number of devices	Signal	approx. 13,500
	Switch	approx. 10,900
	Interlocking device	989
	Level crossing protection device	6,645
Line length	Line with ATS	6,317.1 km
	Line with ATC	1,209.7 km

These signaling devices and signal control systems have adopted safety measures by learning from actual accidents in the long history of railways. And they have developed by introducing and incorporating the technologies of the times in efforts to achieve transport improvement to meet social requirements.

1.2 Efforts Towards Innovation of Signaling

In the course of improvement, some troubles have occurred, such as operation disruption caused by faults and inadequacy in workmanship or defects in the systems or facilities of signal control. As passengers expect safe and precise train operation above all, our management places importance on further improvement in operation and facilities related to safe and stable transport.

In order to win the trust of our customers and provide higher-quality transport, we have to further improve safety and stability of our railway transport. Our group management vision "JR East 2020 Vision —Challenge—" states that "we will improve the reliability of transportation" at the top of the section "Heightening customer satisfaction even further" in the chapter "Ongoing efforts". And, in the section "Advancing research and development aggressively", it lists efforts such as "pursuing extreme safety levels" and "improving stability and reliability".

Hence, JR East is making efforts for the improvement of both physical and systematic aspects of the signal system in the Committee for Improving Transport Stability and the Signal Innovation Project. We have to conduct our research and development based on the improvement of convenience and comfort from the viewpoint of passengers by furthering safe and stable transport. In line with this group philosophy, we are proceeding steadily with research and development towards total innovation of signaling systems. In this article, I present a brief overview of those efforts of our research and development sections.

2 Current Issues and Direction of System Innovation

2.1 Problems of the Current System

(1) Huge Volume of Signal Cabling

One of the problems in the current signaling facilities and signal control system is that those need a huge volume of signal cable (mostly of multicore copper wire) and conduit to accommodate them along the routes connecting signal houses of each station and signaling facilities within stations and along tracks.

A huge volume of the signal cables is laid to connect interlocking devices and other control devices in the station signal house with wayside and station yard signaling devices, as shown in Figs. 1 and 2. The volume varies, however, according to the size of the station due to details such as the number of tracks and platforms.

Fig. 1 Signal Cables in Signal House

Fig. 2 Laying Signal Cables along the Track

(2) Occurrence of Serious Operation Disruption

Signaling troubles shown in Fig. 3 occurred at around 6:10 on September 28, 2003 on the temporary inbound line change in the continuous grade separation work between Mitaka and Kokubunji stations on the Chuo line, causing serious operation disruption. A total of 477 trains were cancelled and many delayed, resulting in considerable inconvenience to passengers. This large-scale railway transport disruption led to the loss of the confidence of society in JR East as well as railways overall, and it serves as an example of an accident that provides a lesson and something to reflect on for those involved in railway signaling.

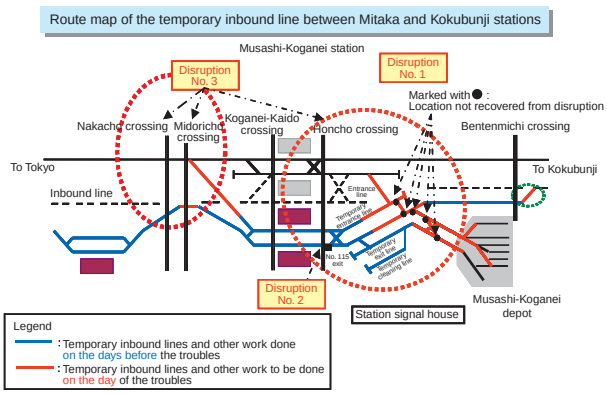

Fig. 3 Overview of the Signaling Troubles in the Line Change of the Chuo Line

(3) Exposed Problems of Signaling Facilities

The immediate cause of the signaling troubles of the Chuo line was the miswiring of the signal cables connected to the electric switch and the level crossing protection device, as shown in Fig. 4. But, the essential issue that caused that miswiring and allowed it to be overlooked was the current signaling facilities that require a huge volume of cabling and cabling work. This demonstrates that problems are inherent in such a signal control system.

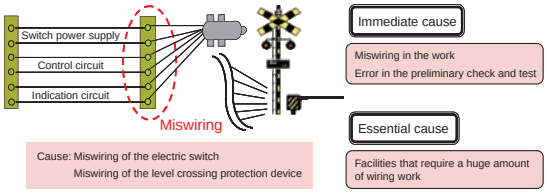

Fig. 4 Immediate Cause and Essential Cause of the Signaling Troubles

Fig. 5 illustrates the current facilities that need connection tests and checks in facility improvement in replacement of aged facilities with signal cable wiring for a total signal control system within a station.

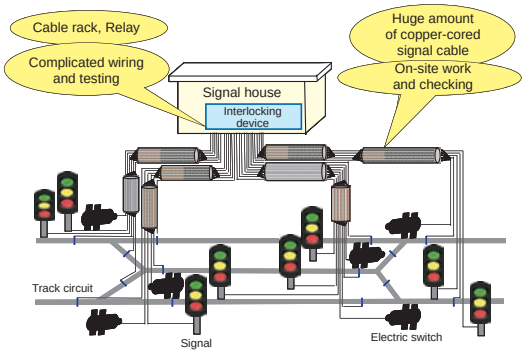

Fig. 5 Work, Testing and Checking for Signal Cabling

2.2 Direction of Signal Control System Innovation

2.2.1 History of Technologies for Signal Control Systems

(1) Definition of Railway Signaling

The meaning of a signal, according to the Kojien Japanese dictionary, is "a means of communication between parties distant to each other using specified codes, or such codes. Color, sound, shape, light etc. are used as the codes". This is the general understanding of what a signal is.

On the other hand, Japanese Industrial Standards (JIS) defines the term such as for railway signaling as follows.

Railway signaling: A means of communication in railways using specified codes such as color, shape and sound; a collective term for signals, signs and sign markers.

Signaling: To indicate the conditions of a train or rolling stock operating in a certain section using color, shape, sound etc.

Aspect: To indicate the instruction which a signal gives.

(2) Past Improvement of Signaling-Related Technology

Since its foundation, JR East has proceeded with introduction of the new signaling facilities and systems shown in Table 2 in the field of signal control system as the technology advanced.

Table 2 Introduction History of New Signaling Facilities and Systems

Year	Description
1989	ATS-P (Section between Ueno and Oku stations)
1995	COSMOS (Computerized Safety Maintenance and Operation Systems for Shinkansen)
1996	ATOS (Chuo line)
2002	Digital train radio for Shinkansen (Tohoku and Joetsu Shinkansen)
2002	Digital ATC for Shinkansen (Section between Morioka and Hachinohe stations)
2003	Digital ATC for conventional lines (Section between Minami-Urawa and Tsurumi stations)
2007	Station yard network-based signal control system (Ichikawa-Ono)
2007	Digital train radio for conventional lines (Yamanote line)

The collision at Higashi-Nakano station on the Chuo line, which occurred just after the foundation of the new JR East, led to the establishment of the Safety Research Laboratory. That also accelerated the replacement of traditional ATS (Automatic Train Stop) devices with the ATS-P (Automatic Train Stop system Pattern) that has higher functionality.

We introduced CTC (Centralized Traffic Control) and PRC (Programmed Route Control) to regional lines in the former Japan National Railways era. But the innovation of operation management in the greater Tokyo area was delayed.

With the formation of JR East, we introduced ATOS (Autonomous decentralized Transport Operation control System) in technical development efforts. Additionally, we achieved an operation management system for the Tohoku and Joetsu Shinkansen with COSMOS (Computerized Safety, Maintenance and Operation Systems of Shinkansen) that has better coordination with other systems.

We also replaced conventional analog ATC (Automatic Train Control) devices with new automatic train control devices that had been transformed by digital transmission technology (D-ATC for conventional lines, DS-ATC for Shinkansen). And we developed and introduced digital train radio equipment both for Shinkansen and conventional lines that replaced analog equipment.

2.2.2 Countermeasures to Deal with Problems

(1) Recognizing Problems and Setting New Development Subjects

Fig. 6 summarizes the aforementioned improvements since the formation of JR East. It covers in particular the field of signaling technology in which our improvement efforts had been insufficient, and it shows the technical fields and subjects we are addressing for the future.

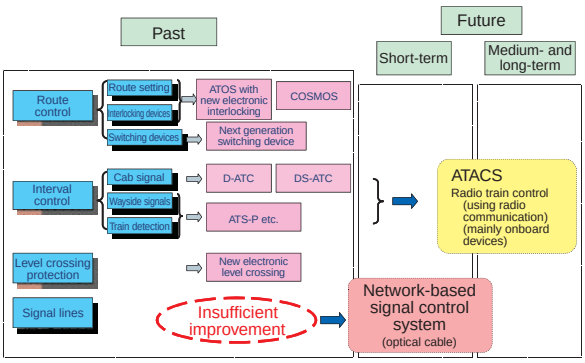

Fig. 6 Past and Future Improvements of Signal Control System

Signal lines that have been illustrated in Fig. 6 as having insufficient improvement are metal cable for signal transmission. We have positioned the system change from metal cable to network-based signal control using optical cable as a short-term development subject.

In the medium and long tem, we are aiming at put the radio train control system with mainly onboard devices (ATACS) into practical use.

(2) Concept of Technology Innovation and Network-Based Signal Control

The basic concept of countermeasures to deal with problems is to shift away from the current system where voltage or current via signaling cables controls interlocking equipment in the signal house and field signaling facilities (signals, markers, electric points etc.). The new system is one where data transmitted through optical fiber cables controls those devices and facilities (Fig. 7).

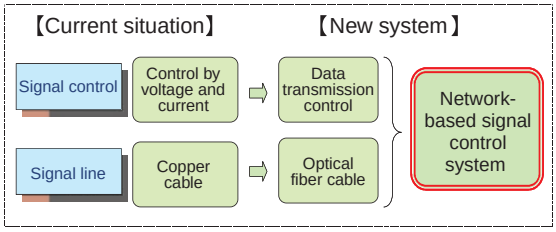

Fig.7 Concept of Network-based Signal Control System

We have adopted universal technologies for the transmission units at both ends of optical fiber cables and the components for branching the fiber cores. And we worked to arrange those to railway-specific requirements to incorporate those in our developed devices.

Fig. 8 shows the optical fiber cabinet actually used in a signal house. The yellow cable in the photo is the optical fiber cable connected to signals and other facilities. Comparing that with the photo of the conventional metal cable in Fig. 1, it is obvious that we will have significant reduction of the volume of cable.

Fig. 8 Optical Fiber Cable Running from the Cabinet in the Signal House to Facilities

(3) Focus Points for Radio Train Control in Light of Technical Trends

Ascertaining technical changes is imperative for a medium- to long-term system change policy. And we must pursue the most appropriate efforts with an overall balance of technologies.

Furthermore, taking into account recent advances in information

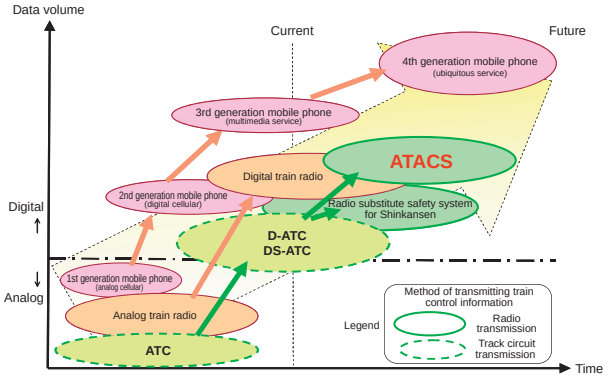

Fig. 9 Radio Train Control: Technical Trends Relating to ATACS

and communication technology, we have come to focus mainly on system innovation by employing the latest radio technology and computer technology.

The radio communication technology for mobile phones is shifting from first-generation analog to second- and third-generation digital. Railway train radios, too, are shifting from analog to digital both for Shinkansen and conventional lines.

We expect that the technologies relating to automatic train control are also evolving from ATC analog type automatic train control system to digital type D-ATC/DS-ATC and the ATACS, a new radio train control system with mainly onboard devices.

Such technical progress is as show in Fig. 9.

The largest difference between an analog system and a digital system is that the latter enables an overwhelmingly large amount of control data transmission. This brings about a big advantage of achieving highly functional automatic train control.

3 Addressing Issues According to Train Control Method

3.1 Network-Based Signal Control System

3.1.1 Overview of the System

Our technical policy is to shift the present system where voltage or current via signaling cables controls signaling facilities to a system where data transmitted through optical fiber cables controls those. Fig. 10 illustrates the system overview.

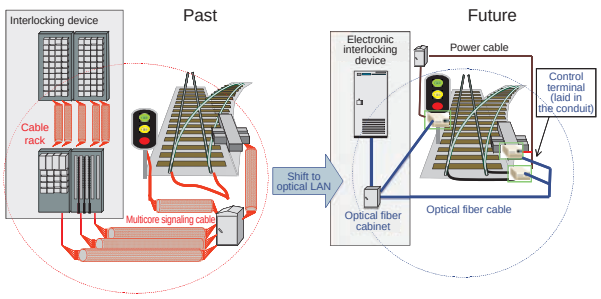

Fig. 10 Overview of the Network-Based Signal Control System

We have also adopted IP (Internet Protocol) as the data transmission method, aiming to take advantage of universal technologies and to easily catch up with future technical advances. We have named the new signaling system with these measures the "network-based signal control system". Now we are making efforts for further technical development and practical application. The network-based signal control system is classified into the following four component technical fields. Fig. 11 outlines the total system.

- Station yard network-based signal control system
- Network-based signal control system between stations
- Station yard logic controller
- Network-based control of level crossings between stations

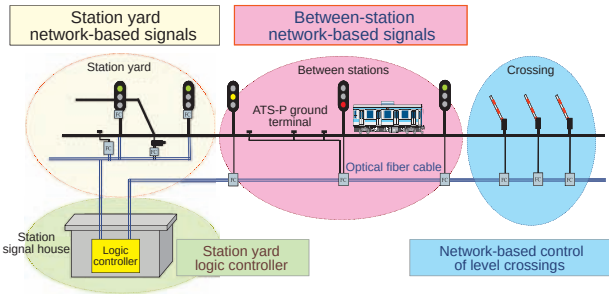

Fig. 11 Technical Fields and Elements of the Network-Based Signal Control System

The network-based signal control system conforms to specifications to assure high safety and reliability as railway signal components ("failsafe", RAMS (IEC62278), etc.)

3.1.2 Current Status of Development and Future Outlook

(1) System in Practical Use

In order to test a station yard network-based signal control system, we made a test system consisting of a device for the signal house and a field controller (FC) to be installed in or on the signal devices. After the type approval test, we carried out a long-term field test at Tsuchiura station on the Joban line.

Based on the development results after those tests, we started actual use of the first station yard network-based signal control system at Ichikawa-Ono station on the Musashino line in February 2007 when the relay interlocking equipment of that station was replaced due to aging.

(2) System Under Development and Future Schedule

We are conducting observation tests on the network-based signal control system between stations, after carrying out field tests near Kita-Kogane station on the Joban Rapid Service line after completing system improvement for actual use.

Furthermore, we are developing station yard logic controllers and unified monitoring functions with aims of centralizing logic devices in the signal house along with simplifying interlocking equipment repair and maintenance and supporting its design. And we are conducting technical reviews of network control of crossing protection devices between stations (Table 3).

Table 3 Overall Development Schedule of Network-Based Signal Control System

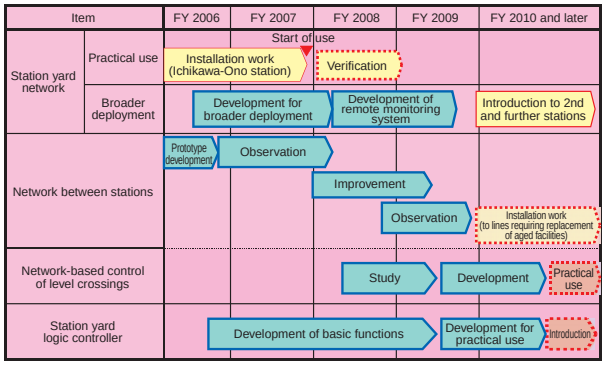

3.2 ATACS

3.2.1 Aiming for Technology Development

(1) Train Detection by Track Circuit and Position Detection by ATACS

Track circuits are an invention by American engineer William Robinson, and he had that patented in August 1872. In 1873, the Pennsylvania Railroad first brought out full-fledged automatic signals using track circuits.

In Japan, track circuits were first used in an automatic block system along with a disk-type automatic signal when Kobu Railway (present Chuo line of JR East) electrified the section between Iidacho and Nakano in August 1904.

Train detection and fixed block system using track circuits has such a proven history. But at the same time, it has constraints in train detection accuracy and the fixed block system, as shown on the left side of Fig. 12.

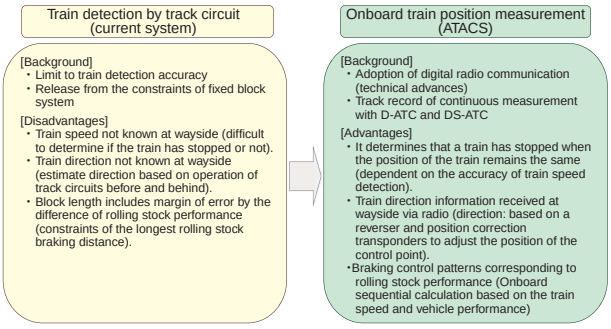

Fig. 12 Comparison of Train Detection by Track Circuit and Position Measurement by ATACS

(2) Countermeasures to Issues Related to Track Circuits and Fixed Block System

The constraints of train detection accuracy and the fixed block system mentioned in the previous paragraph are essential problems of the method using track circuits. In order to address those issues, the most effective countermeasure is the method where a train identifies its own position and also transmits and receives the position information to and from the train ahead using communication between onboard devices and wayside devices.

In this way, train interval control can be achieved according to train position and vehicle performance as described on the right side of Fig. 12. We have decided to adopt radio communication for transmission of train position information between onboard devices and wayside devices, and we studied this new method (ATACS) for more than 10 years.

3.2.2 ATACS

(1) Overview of the ATACS System

The following are the three main basic elements in train control.

- Train detection (identifying position or passing of cars)
- Route control (changeover of in-yard turnouts by points)
- Interval control (interval to other train, targets for stopping or speed limiting)

ATACS shown in Fig. 13 is a new control method where a train measures its own position and transmits and receives such position information to and from other trains using digital radio communication via wayside devices.

ATACS is the system whereby a train itself detects its position using the running distance information from its wheel rotation and the adjusted position information from transponders. In this way, ATACS enables train interval control other than by a fixed block system (that indicates signals for permitting or prohibiting entrance to protected sections and allowable speed by wayside or onboard indicators).

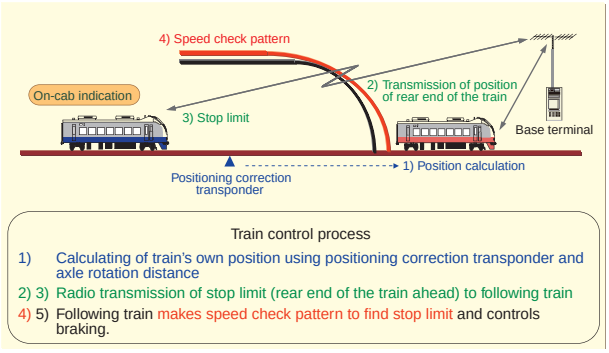

Fig. 13 Overview of Radio Train Control in ATACS

(2) Development History and Current Status of ATACS

With an aim of simplifying the train control system with reduced wayside signaling facilities, we are carrying out ATACS implementation work for start of use in spring 2011 on the Senseki line (between Aoba-Dori and Higashi-Shiogama).

Table 4 describes the history from the start of the development up to today.

Table 4 ATACS Schedule from Initial Development to Practical Implementation

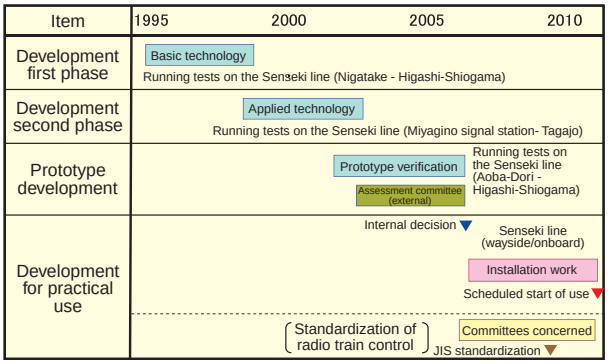

4 Past Technical Advances and the Future of Signal Control

(1) Early Railways and Development of Signaling Technology

The world first commercial railway was the railway connecting Stockton and Darlington in England that opened in 1825. It ensured safety of train operation by hand signals. Then, advances such as mechanical and electric signaling for safe train operation came with the expansion of railway networks, increase of transportation and safety need for measures to be taken after railway accidents.

In Japan, the railway between Shimbashi and Yokohama was opened on October 14, 1872. From the beginning, that railway used semaphores, an early type of mechanical signal.

The first relay interlocking device came into use at Shibuya, Eifukucho and Inokashira stations of the Teito Electric Railway in August 1933. That was a pioneering relay signaling technology, which was used for long time.

(2) Technical Advances in Railway Signaling for Future

At the opening of Tokaido Shinkansen, we introduced ATC devices that adopted the electronic technology at that time. That determined the direction of railway signaling to implement microelectronics. Then, new electronic interlocking devices and PRC (Programmed Route Control) with autonomous distributed control technology that JR East incorporated for ATOS marked a start of IT signaling.

The current technologies used for network-based signal control systems and ATACS could be called ICT signaling. Those technologies will further progress toward what could be called signaling technologies of the future for the optimization of the total system based on the selective technology combinations and incorporation of new technologies (Table 5). Those will include combination of universal broadband radio communication to dedicated train radio communication, addition of satellite positioning technologies such as GPS to existing train positioning technologies.

Table 5 Technical Advances of Railway Signaling

Category		Description
I	Hand signals	Flag signals and hand signals, Time interval method
II	Mechanical signaling technology	Mechanical signaling devices and markers, Mechanical interlocking
III	Electric signaling technology	Electric signaling devices, Electric and electro mechanical interlocking
IV	Relay signaling technology	Relay interlocking, ATS, Wired logic control
V	Microelectronic signaling technology	Electronic interlocking, ATC, CTC, New ATS
VI	IT signaling technology	Operation control system: New electronic interlocking, PRC (Programmed Route Control)
VII	ICT signaling technology	Network-based signal control, Radio train control
(VIII)	Signaling technology of the future	Mobile network, Multi-detection using GPS etc.

5 Towards Further Customer Orientation

In Japanese society with its falling birthrate and aging population, we cannot expect an increase in customers for our railway business. Our company's operating environment will be ever more difficult due to that and issues such as more intensified competition in the transportation market. And demands from our customers are more and more refined and diverse.

At the same time, in corporate social responsibility, railways are responsible for safe and stable transport. And the organization and human resources as well as technologies of railways support that. It is important therefore to hand down to the next generation the inherent signaling technologies that firmly support railway transport.

Social changes and technical advances will be ever more turbulent in the future. That is why it is important to get back our roots and find issues in railway systems and proceed with research and development to overcome those. We will thus make efforts to obtain customer approval as a reliable railway and to improve our system to the one befitting the 21st century.

Under the policy of "advancing research and development aggressively" whereby we aim for innovation in railway business, we will promote research and development and improve safety and stability of transport to achieve further customer orientation.

Reference:

1) History Editorial Committee of Japanese National Railways for 100 years, "History of Japanese National Railways for 100 years", pp. 89–104, Vol. 1, March 1969 and pp. 515–526, Vol. 13, February 1974
2) History Editorial Committee of Railway Signaling Development, "History of Railway Signaling Development", pp. 17–35, April 1980
3) Tetsuo Takashige, "Development History of Train Control System Technology", Railway & Electrical Engineering, Vol. 15, No. 2, February 2004
4) Masayuki Matsumoto, "History of Development of Train Control System Technology", the Institute of Electrical Engineers of Japan, HEE064, January 2007
5) Tamotsu Kato, "System Changes in Train Control and Transport Management", JR East Technical Review, pp. 8–13, No. 11–Winter 2008